Data Sheet

Article number: 2029330100RR2SCR
Description: E+G Linear actuators - GN 293-30-100-RR2-SCR

Measures

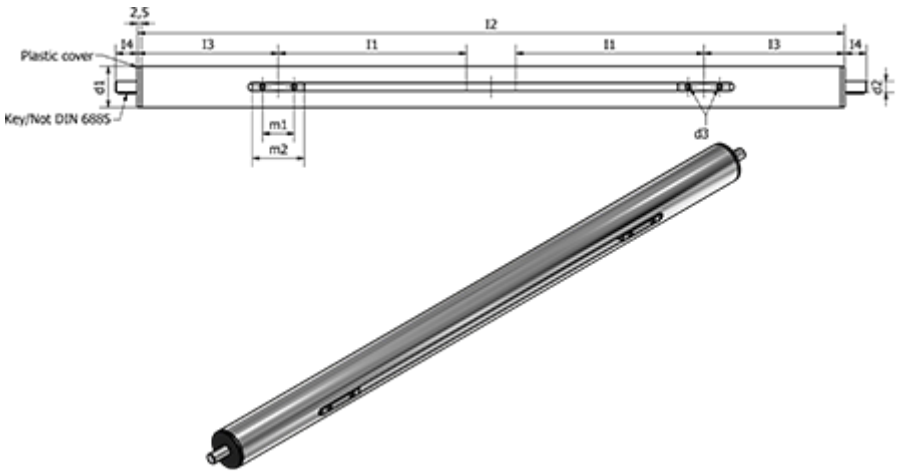

d1	= 30	m2	= 38
d2 f7	= 8	Max. travel	= 601
d3	= M5	Shaft key DIN 6885	= A2x2x12
l1	= 100	Shaft thread	= TR14x4
l2	= 2xl1+253		
l3	= 102.5		
l4	= 16		
m1	= 23		

Product drawings and brochures of any kind may contain errors for which Brd. Klee A/S cannot be liable.